The information contained in this drawing is the sole property of CWS Coil Winding Specialist.
Any reproduction in part or whole without written permission of CWS Coil Winding Specialist is prohibited.

REVISION HISTORY						
REV	ECN	DESCRIPTION	SIGN & DATE			
			BY	DATE	CHK	DATE
A		INITIAL PRODUCTION RELEASE	KLC	2/12/10	AK	2/12/10

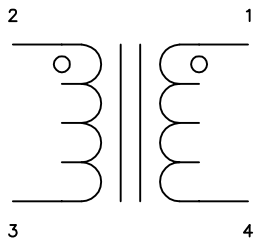

SCHEMATIC

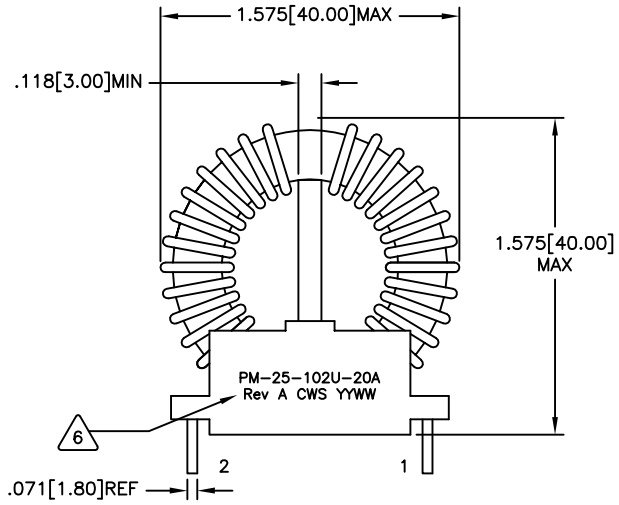

FRONT VIEW

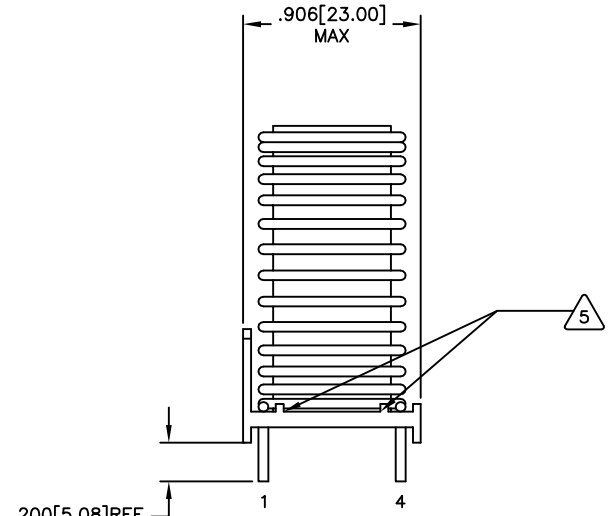

SIDE VIEW

7 BUILT TO RoHS COMPLIANCE AND LEAD FREE.

6 IF APPLICABLE, MARK PART NUMER AND REVISION

ADD EPOXY WHERE SHOWN
PULL LEADS THRU BASE FOR SELF LEADS
5 REMOVE WIRE INSULATION AND TIN LEADS

WIND COILS EVENLY SPACED
4 CONSTRUCTION:

OPERATING RANGE: −40° TO +125°C

LEAKAGE INDUCTANCE = 4.0 uH
RATED CURRENT MAX. = 20 AMPS RMS
DCR= 5 MILLI−OHMS MAX PER WINDING
INDUCTANCE = 1.0 mH MIN
3 SPECIFICATIONS @ 25°C, 60 Hz, .250 mV

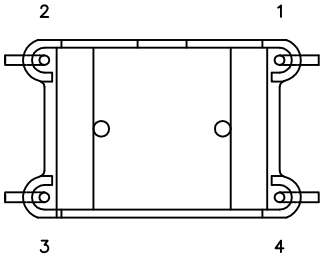

BOTTOM VIEW

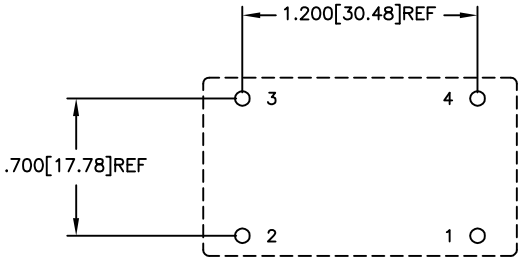

MOUNTING HOLES PATTERN

HEADER: UL−94V−0 RATED BASE & SPACER
WIRE: UL RECOGNIZED CL155°C RATED MAGNET WIRE AWG#13 OR ø1.80 MM
2 CORE: HIGH PERM MANGANESE ZINC

RATING CLASS B (130°) REQUIRED
1 MATERIAL: UL RECOGNIZED 94V−0 FLAMMABILITY FOR BOBBIN

NOTES: UNLESS OTHERWISE SPECIFIED. READ FROM BOTTOM UP.

	CODE IDENT	MFG. P/N	DESCRIPTION	ITEM NO.
PARTS LIST				

AUTOCAD		X
SOLIDWORKS		
SIGN		DATE
DRAWN	KLC	2/12/10
CHECKED	AK	2/12/10
ENGR.	KLC	2/12/10
APPR.	KLC	2/12/10

UNLESS OTHERWISE SPECIFIED
DIMENSIONING AND TOLERANCE PER ANSI Y14.5M
ALL DIMENSIONS ARE IN INCHES AND [MILIMETERS].
TOLERANCE INCHES: .XXX=±.005 .XX=±.015 ∢=±0°30'
TOLERANCE METRICS: .XXX=±.127 .XX=±.38 ∢=±0°30'
ANGLE PROJECTION
DO NOT SCALE DRAWING

COILWS COM, INC
www.coilws.com

CWS Coil Winding Specialist.
353 W Grove Ave
Orange, CA 92865

TITLE: Common Mode Choke
1.0 mH MIN, 20 Amp High Current

SIZE B | DWG. NO. PM−25−102U−20A | REV A

SCALE 2=1 | SHEET 1 OF 1

CAD−FILE: